Work Order ID 72105

Tuesday, July 19, 2011 11:15:30 AM

Item ID: D4072-3 **Accept** **Setup Start** **Stop**

Revision ID:

Item Name: Airframe Hinge Backing Plate

Start Date: 7/19/2011 **Start Qty:** 12.00 **Cust Item ID:**

Required Date: 7/25/2011 **Req'd Qty:** 12.00 **Customer:**

Reference:

Approvals: **Process Plan:** _____ **Date:** 11-07-19 **Tooling:** _____ **Date:** _____ **Run Start** **Stop**

QC: _____ **Date:** _____ **SPC (Y/N):** _____ **Date:** _____

Sequence ID/ Work Center ID	Operation Description	Set Up/ Run Hours	Tool ID	Tool #	Plan Code	Accept Qty	Reject Qty	Reject Number	Insp. Stamp
Draw Nbr / **Revision Nbr**									
D4072 / B									
100		0.00							
Waterjet	**Memo**	0.00				RB 11-8-3			
FLOW CNC Waterjet 6061 . 063	1-Cut as per Dwg Dwg Rev: B Prog Rev: B 2-Deburr if necessary								
110	QC2- Inspect parts off machine FAI/FAIB	0.00							
QC	**Memo**	0.00				RB 11-8-3			
Quality Control									

29

Dart Aerospace Ltd

W/O:		WORK ORDER CHANGES					
DATE	STEP	PROCEDURE CHANGE	By	Date	Qty	Approval Chief Eng / Prod Mgr	Approval QC Inspector

Part No: _____ **PAR #:** _____ **Fault Category:** _____ **NCR:** Yes No **DQA:** _____ **Date:** _____

Resolution: _____ **Disposition:** _____ **QA: N/C Closed:** _____ **Date:** _____

NCR:		WORK ORDER NON-CONFORMANCE (NCR)						
DATE	STEP	Description of NC Section A	Corrective Action Section B			Verification Section C	Approval Chief Eng	Approval QC Inspector
			Initial Chief Eng	Action Description Chief Eng	Sign & Date			

NOTE: Date & initial all entries

Work Order ID 72105

Tuesday, July 19, 2011 11:15:30 AM

Item ID: D4072-3 **Accept** **Setup Start** **Stop**

Revision ID:

Item Name: Airframe Hinge Backing Plate

Start Date: 7/19/2011 **Start Qty:** 12.00 **Cust Item ID:**

Required Date: 7/25/2011 **Req'd Qty:** 12.00 **Customer:**

Reference:

Run Start **Stop**

Approvals: **Process Plan:** _____ **Date:** _____ **Tooling:** _____ **Date:** _____

QC: _____ **Date:** _____ **SPC (Y/N):** _____ **Date:** _____

Sequence ID/ Work Center ID	Operation Description	Set Up/ Run Hours	Tool ID	Tool #	Plan Code	Accept Qty	Reject Qty	Reject Number	Insp. Stamp
120	QC8- Inspect parts - second check	0.00				counted x29			
QC	**Memo**	0.00							
Quality Control									
130	Chemical Conversion Coat per QSI005 4.1	0.00				29	ø	M	11/08/05
HandFinish	**Memo**	0.00							
Hand Finishing									
140	White Gloss(Ref:4.3.5.1) per QSI005 4.3-Alum M118439	0.00				29	ø	M	11/08/08
Powdercoat	**Memo**	0.00							
Powder Coating	POWDER COAT: Start Time: 9:00am Oven Temperature: 320°F Finish Time: 9:30am								

Dart Aerospace Ltd

W/O:		WORK ORDER CHANGES					
DATE	STEP	PROCEDURE CHANGE	By	Date	Qty	Approval Chief Eng / Prod Mgr	Approval QC Inspector

Part No: _____ **PAR #:** _____ **Fault Category:** _____ **NCR:** Yes No **DQA:** _____ **Date:** _____

Resolution: _____ **Disposition:** _____ **QA: N/C Closed:** _____ **Date:** _____

NCR:		WORK ORDER NON-CONFORMANCE (NCR)						
DATE	STEP	Description of NC Section A	Corrective Action Section B			Verification Section C	Approval Chief Eng	Approval QC Inspector
			Initial Chief Eng	Action Description Chief Eng	Sign & Date			

NOTE: Date & initial all entries

Work Order ID 72105

Tuesday, July 19, 2011 11:15:30 AM

Item ID: D4072-3 **Accept** **Setup Start** **Stop**

Revision ID:

Item Name: Airframe Hinge Backing Plate

Start Date: 7/19/2011 **Start Qty:** 12.00 **Cust Item ID:**

Required Date: 7/25/2011 **Req'd Qty:** 12.00 **Customer:**

Reference:

Run Start **Stop**

Approvals: **Process Plan:** _____ **Date:** _____ **Tooling:** _____ **Date:** _____

QC: _____ **Date:** _____ **SPC (Y/N):** _____ **Date:** _____

Sequence ID/ Work Center ID	Operation Description	Set Up/ Run Hours	Tool ID	Tool #	Plan Code	Accept Qty	Reject Qty	Reject Number	Insp. Stamp
150	QC3- Inspect Part Finish	0.00				29x			11/08/08
QC	Memo	0.00							
Quality Control									
160	Identify as per dwg & Stock Location: 120	0.00				11/8/8		29	
Packaging	Memo	0.00							
Packaging									
170	QC21- Final Inspection - Work Order Release	0.00				CK 11/08/09			
QC	Memo	0.00							
Quality Control									

11-08-8 89

Dart Aerospace Ltd

W/O:		WORK ORDER CHANGES					
DATE	STEP	PROCEDURE CHANGE	By	Date	Qty	Approval Chief Eng / Prod Mgr	Approval QC Inspector

Part No: _____ **PAR #:** _____ **Fault Category:** _____ **NCR:** Yes No **DQA:** _____ **Date:** _____

Resolution: _____ **Disposition:** _____ **QA: N/C Closed:** _____ **Date:** _____

NCR:		WORK ORDER NON-CONFORMANCE (NCR)						
DATE	STEP	Description of NC Section A	Corrective Action Section B			Verification Section C	Approval Chief Eng	Approval QC Inspector
			Initial Chief Eng	Action Description Chief Eng	Sign & Date			

NOTE: Date & initial all entries

Picklist Print

Tuesday, July 19, 2011 11:15:36 AM

Work Order ID: 72105

Parent Item: D4072-3

Parent Item Name: Airframe Hinge Backing Plate

Start Date: 7/19/2011 **Required Date:** 7/25/2011

Start Qty: 12.00 **Required Qty:** 12.00

Comments: IPP Rev:A 10.06.08 new issue DD verf:EC IPP REV:B
DRAWING REV. CHANGE AS PER ECN 11-598 11-07-05 JFS
VERIFIED BY:

Component Item ID/ Item Name	Replacement Item ID	Mfg/ Purch	Bin Item	Primary Location	Last Location	Route Seq ID	Unit of Measure	Qty on Hand	Qty per Kit	Total Qty	Qty Issued	Date Issued	Status
M6061T6S.063 6061-T6 .063 Sheet		Purchased	No			100	sf	211.4456	0.0087	0.109895	1.		

B11-8-3

Location	Loc Qty	Loc Code
MAT021	211.4455684	
116308	26.9755684	
117285	184.47	

117285

29

Dart Aerospace Ltd

W/O:		WORK ORDER CHANGES					
DATE	STEP	PROCEDURE CHANGE	By	Date	Qty	Approval Chief Eng / Prod Mgr	Approval QC Inspector

Part No: _____ **PAR #:** _____ **Fault Category:** _____ **NCR:** Yes No **DQA:** _____ **Date:** _____

Resolution: _____ **Disposition:** _____ **QA: N/C Closed:** _____ **Date:** _____

NCR:		WORK ORDER NON-CONFORMANCE (NCR)						
DATE	STEP	Description of NC Section A	Corrective Action Section B			Verification Section C	Approval Chief Eng	Approval QC Inspector
			Initial Chief Eng	Action Description Chief Eng	Sign & Date			

NOTE: Date & initial all entries

DART AEROSPACE LTD	Work Order:	72105
Description: Airframe Hinge Backing Plate	Part Number:	D4072-3
Inspection Dwg: D4072 ~~Rev. A~~ Rev B. 8/11/08/09		Page 1 of 1

FIRST ARTICLE INSPECTION CHECKLIST

Drawing Dimension	Tolerance	Actual Dimension	Accept	Reject	Method of Inspection	Comments
Ø0.203	+0.005/-0.001	.206	✓		✓ B02	
2.00	+/-0.010	2.000	✓		✓	
0.63	+/-0.030	.626	✓		✓	
0.45	+/-0.030	.451	✓		✓	
0.31	+/-0.030	.313	✓		✓	
1.100	+/-0.010	1.103	✓		✓	
0.063	+/-0.010	.062	✓		✓	

Measured by:	B	Audited by:	8	Preliminary Approval:	
Date:	11-8-3	Date:	11/08/03	Date:	

Rev	Date	Change	Revised by	Approved
A	10.10.25	New Issue	KJ	

Dart Aerospace Ltd

W/O:		WORK ORDER CHANGES					
DATE	STEP	PROCEDURE CHANGE	By	Date	Qty	Approval Chief Eng / Prod Mgr	Approval QC Inspector

Part No: _____ **PAR #:** _____ **Fault Category:** _____ **NCR:** Yes No **DQA:** _____ **Date:** _____

Resolution: _____ **Disposition:** _____ **QA: N/C Closed:** _____ **Date:** _____

NCR:		WORK ORDER NON-CONFORMANCE (NCR)						
DATE	STEP	Description of NC Section A	Corrective Action Section B			Verification Section C	Approval Chief Eng	Approval QC Inspector
			Initial Chief Eng	Action Description Chief Eng	Sign & Date			

NOTE: Date & initial all entries

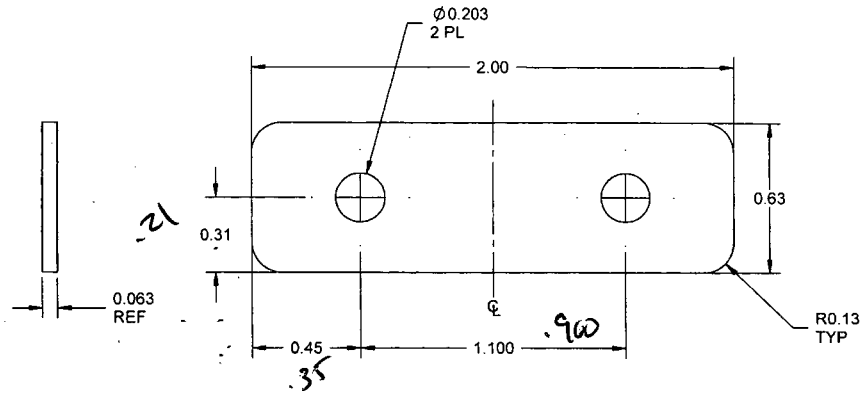

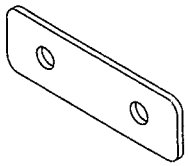

SHOP COPY
RETURN TO
ENGINEERING
UNCONTROLLED
SUBJECT TO CHANGE
WITHOUT NOTICE
VR 72105
NO
pl 11-07-19

D4072-3 AIRFRAME HINGE BACKING PLATE

RELEASED
2011-06-30

NOTES:
1) MATERIAL: 6061-T6/T62 ALUMINUM SHEET, 0.063 THICK
PER QQ-A-250/11 OR AMS-QQ-A-250/11
OR AMS 4025 OR AMS 4027
OR ASTM B209
REF DART SPEC M6061T6S.063
2) FINISH: CHEMICAL CONVERSION COAT PER DART QSI 005 4.1
POWDER COAT "WHITE" (4.3.5.1) PER DART QSI 005 4.3
3) TOLERANCES: PER DART QSI 018 UNLESS OTHERWISE NOTED
4) UNITS: INCHES UNLESS OTHERWISE NOTED
5) BREAK SHARP EDGES: 0.005 TO 0.010 MAX
6) IDENTIFICATION: PER QSI 044 6.1
7) WEIGHT: 0.01 lbs

DESIGN		DART AEROSPACE USA, INC. PORT HADLOCK, WA
DRAWN	RF	
CHECKED		DRAWING NO. D4072 — REV. B — SHEET 2 OF 3
MFG. APPR.		
APPROVED		TITLE: AIRFRAME HINGE — SCALE: NTS
DE APPR.		
DATE	10.11.02	

COPYRIGHT © 2010 BY DART AEROSPACE USA, INC.
THIS DOCUMENT IS PRIVATE AND CONFIDENTIAL AND IS SUPPLIED ON THE EXPRESS CONDITION THAT IT IS NOT TO BE USED FOR ANY PURPOSE OR COPIED OR COMMUNICATED TO ANY OTHER PERSON WITHOUT WRITTEN PERMISSION FROM DART AEROSPACE USA, INC.

Dart Aerospace Ltd

W/O:		WORK ORDER CHANGES					
DATE	STEP	PROCEDURE CHANGE	By	Date	Qty	Approval Chief Eng / Prod Mgr	Approval QC Inspector

Part No: _____ **PAR #:** _____ **Fault Category:** _____ **NCR:** Yes No **DQA:** _____ **Date:** _____

Resolution: _____ **Disposition:** _____ **QA: N/C Closed:** _____ **Date:** _____

NCR:		WORK ORDER NON-CONFORMANCE (NCR)						
DATE	STEP	Description of NC Section A	Corrective Action Section B			Verification Section C	Approval Chief Eng	Approval QC Inspector
			Initial Chief Eng	Action Description Chief Eng	Sign & Date			

NOTE: Date & initial all entries